ORAC DECOR®
COLLECTION

ORAC Belgium - tel: +32 (0)59-80 32 52 - fax: +32 (0)59-80 28 10
www.oracdecor.com - e-mail: oracinfo@oracdecor.com

UM 310/03

INSTALLATION INSTRUCTIONS • INSTRUCTIONS DE POSE • PLAATSINGSINSTRUCTIES • GEBRAUCHSANLEITUNG • MANUAL DEL USARIO • GUIDA DELL' UTENTE • MANUAL DE UTILIZAÇÃO

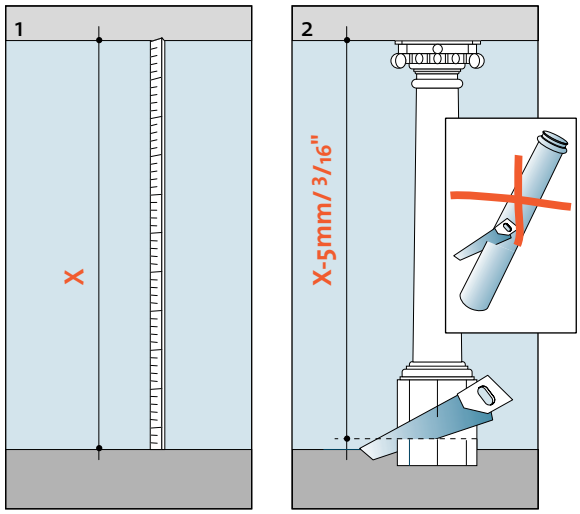

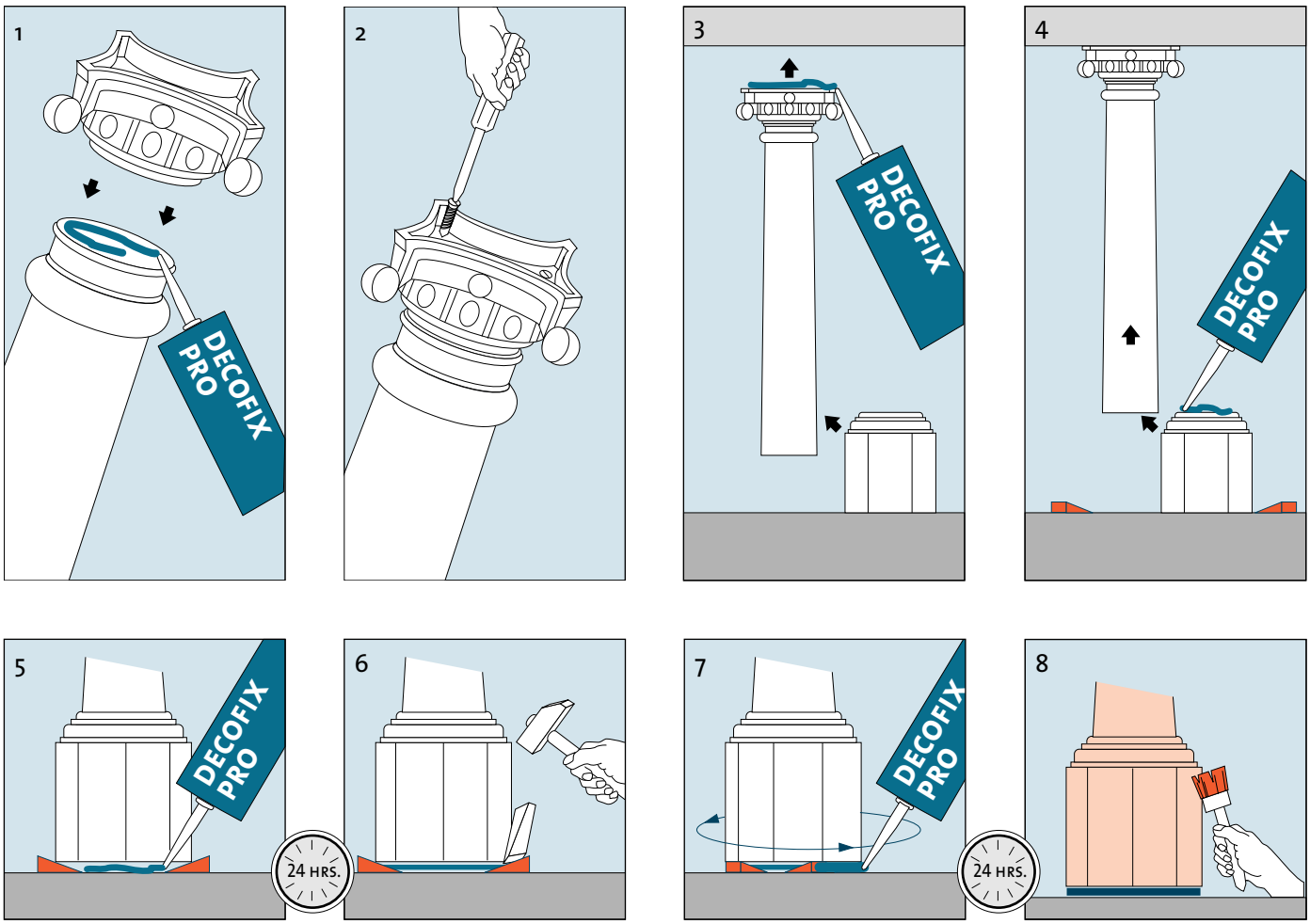

ORAC DECOR®
COLLECTION

ORAC Belgium - tel: +32 (0)59-80 32 52 - fax: +32 (0)59-80 28 10
www.oracdecor.com - e-mail: oracinfo@oracdecor.com

UM 315/03

INSTALLATION INSTRUCTIONS • INSTRUCTIONS DE POSE • PLAATSINGSINSTRUCTIES • GEBRAUCHSANLEITUNG • MANUAL DEL USARIO • GUIDA DELL' UTENTE • MANUAL DE UTILIZAÇÃO

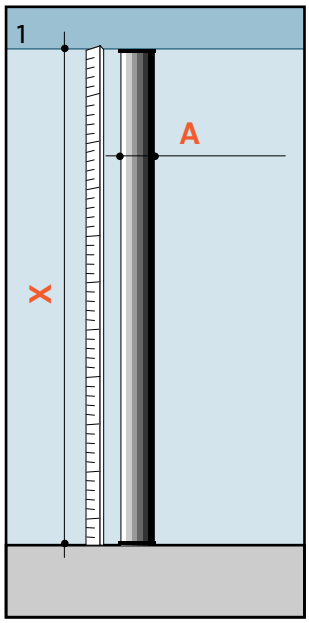

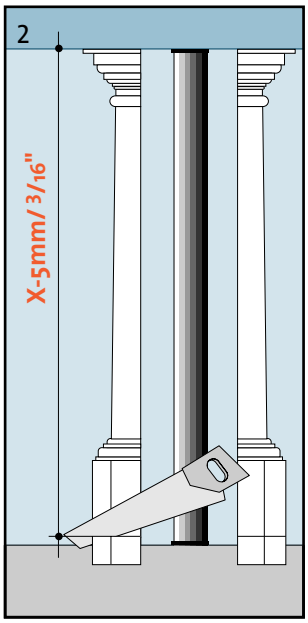

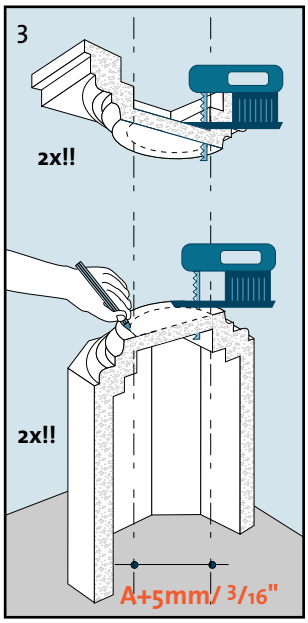

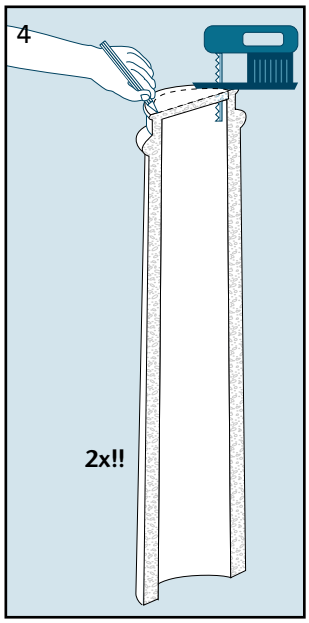

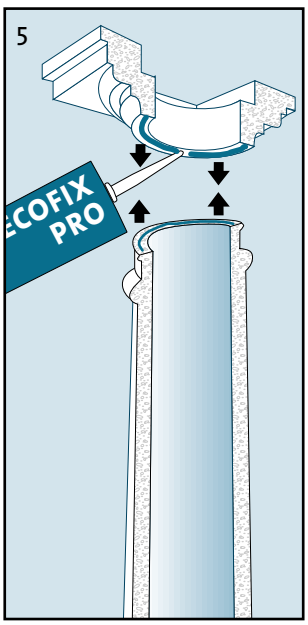

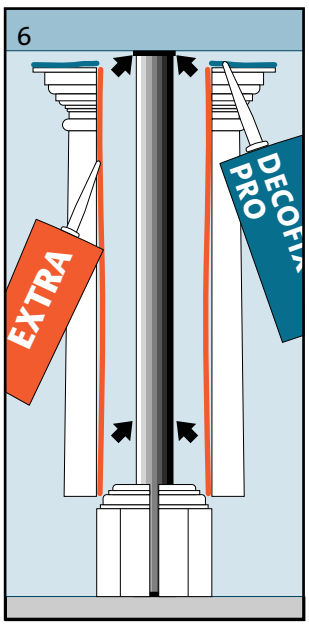

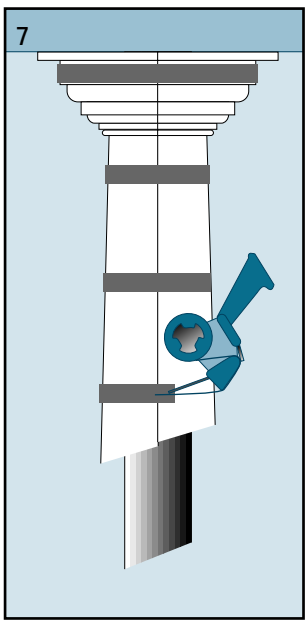

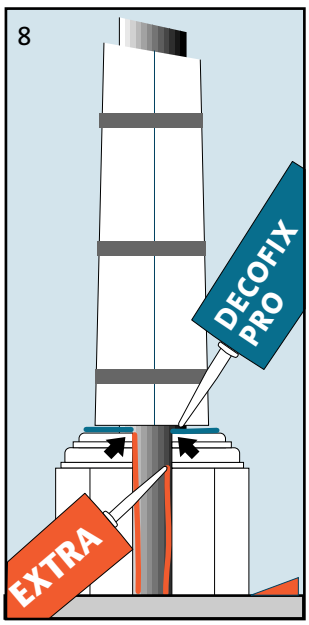

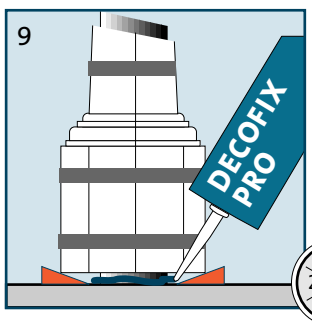

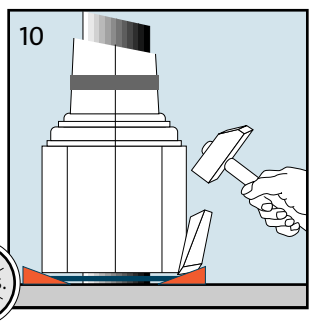

24 HRS.

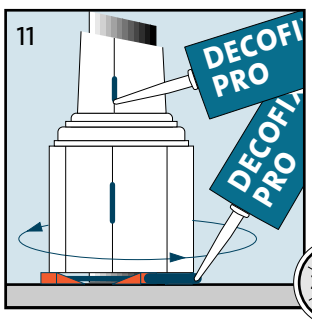
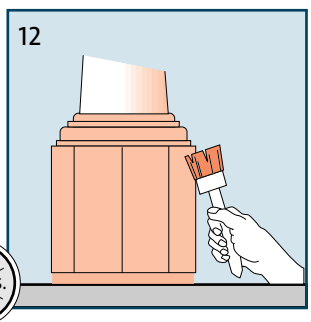
24 HRS.